T5496

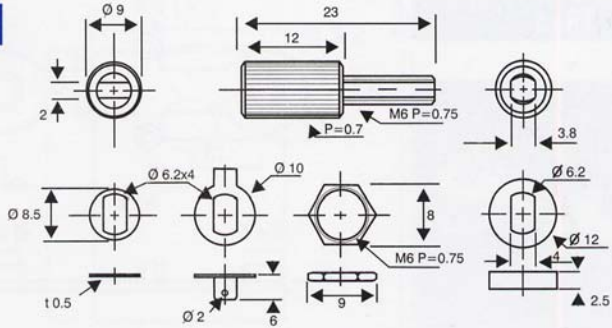

MATERIALS:
TERMINAL: COPPER ALLOY / NICKEL PLATED
WASHER: ABS