DRAWING No 45002	DO NOT SCALE	DIMENSIONS IN MILLIMETRES FIRST ANGLE PROJECTION	CAD SYSTEM: AutoCAD 2005	CAD FILE NAME: //smbserver/drawings/45002

45002
Description

- Material: ABS chrome plated
- Paint fill red indicator

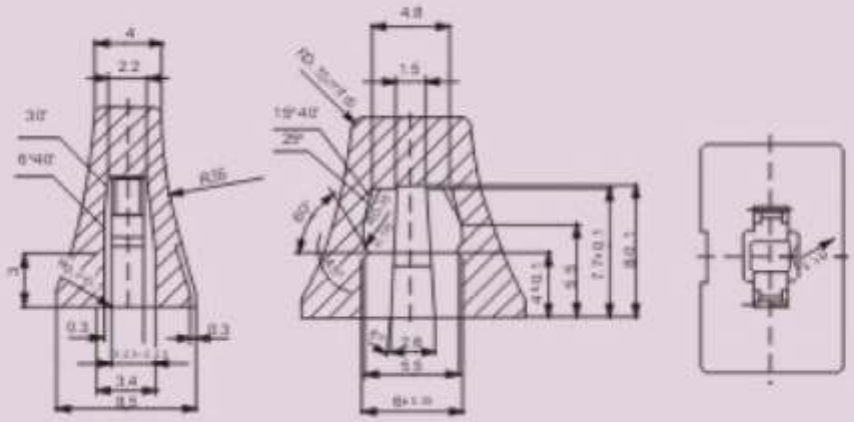

ISS	ECN	SIGN	DATE	ISS	ECN	SIGN	DATE

NOTICE
ALL RIGHTS RESERVED: UNAUTHORISED USE, DISCLOSURE OR REPRODUCTION IN WHOLE OR IN PART IS STRICTLY PROHIBITED.
© 2006

WESTSIDE SUPPLIES LIMITED
Durban Road, Bognor Regis
West Sussex, UK, PO22 9QT
Tel: +44 (0) 1243 860626
Fax: +44 (0) 1243 866626
email: sales@westside-supplies.co.uk
Web: www.westside-supplies.co.uk

STANDARD TOLERANCES
NO PLACE DEC. ±0.5
1 PLACE DEC. ±0.2
2 PLACE DEC. ±0.1
ANGULAR ±0.5°
UNLESS STATED OTHERWISE

SCALE: NTS

MATERIAL

FINISH

DRAWN	DATE	SIGN	DATE
RM	11/12/06		

TITLE Slide Knobs

DRAWING No 45002

A4